SPEC. 55409

PRODUCT NAME:

8" BACKSPLASH PRE-RINSE WITH ELBOWS

MODEL:

☐ 55409 8" BACKSPLASH PRI-RINSE W/ LEVER HANDLES

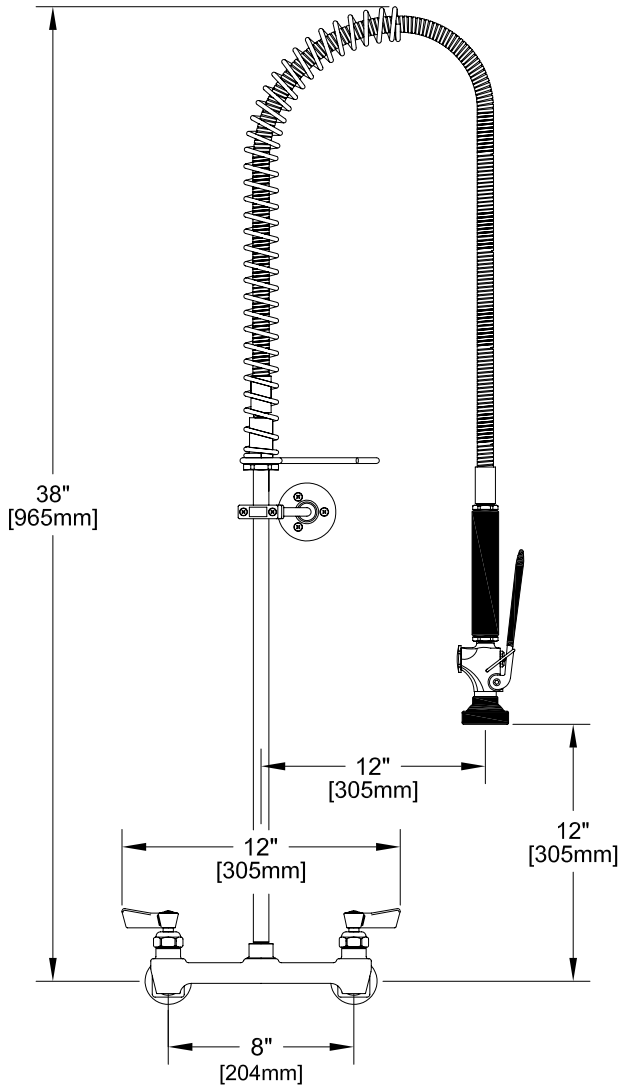

8" C/C BACKSPLASH FAUCET

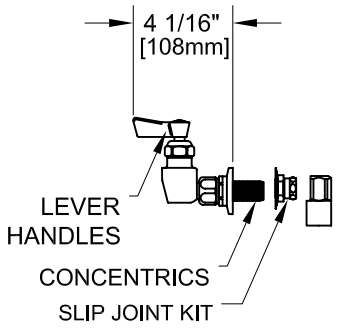

ROUGH-IN:

BACKSPLASH

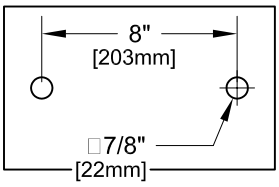

ANSI/A112.18.1-2005

FEATURES

CONTROL VALVE
* 8" C/C BACKSPLASH MOUNT
* CONCENTRICS
* INTERNAL SPRING LOADED CHECK VALVES
* SWIVELLING SEAT DISKS
* HOT SIDE STEM - RIGHT HAND
* COLD SIDE STEM - LEFT HAND
* STAINLESS STEEL SEATS
* STAINLESS STEEL SEAT SCREWS
* STAINLESS STEEL HANDLE SCREWS
* 1/2" CLOSE ELBOWS

HOSE
* 36" LENGTH
* STAINLESS STEEL END FITTINGS
* STAINLESS STEEL EXTERNAL JACKET
* 3 PLY FIBER REINFORCED INTERNAL RUBBER HOSE
* REPAIRABLE IN FIELD WITH SIMPLE TOOLS

ULTRA SPRAY VALVE
* LOWEST ENERGY USER - 1.15 GPM @ 60 PSI
* CLEANS FASTER - TEST PROVEN
* ENGINEERED TO LAST - NO 'O' RINGS TO LEAK
* INTERCHANGEABLE - FITS ALL BRANDS

WALL BRACKET
* ADJUSTS FROM 2" TO 12"

SYSTEM LIMITS
* TEMP: 40°F MIN. TO 140°F MAX.
* PRESSURE: 200 PSI MAX. STATIC

SHIPPING WEIGHT
* 12.0 LBS

FISHER

FISHER MANUFACTURING COMPANY
TOLL FREE: 800-421-6162 - FAX: 800-832-8238
information@fisher-mfg.com - www.fisher-mfg.com