APPLICATION:

PRODUCT NAME:

WASTE VALVE CLAMP RING WRENCH

JOB NAME:

☐ _____ SPECIAL CONFIGURATION
CHECK BASE MODEL AND OPTIONS

QUANTITY:

ITEM NO.

MODEL:

☐ 6130

OPTIONS OR MODIFICATIONS:

- ☐ SUPPLY LINES (24" OR 36") CIRCLE LENGTH
- ☐ NIPPLES
- ☐ ELBOWS
- ☐ HANDLES (CROSS OR WRIST) CIRCLE STYLE
- ☐ VANDAL RESISTANT KIT
- ☐ OTHER _____

FEATURES:

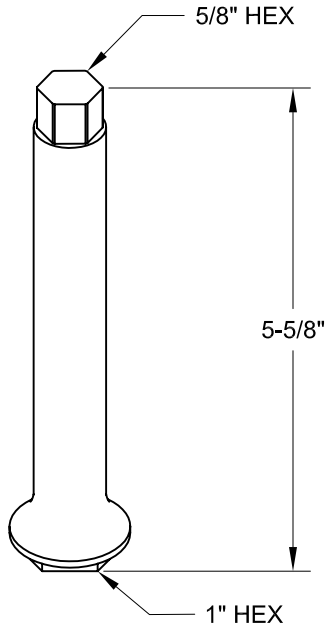

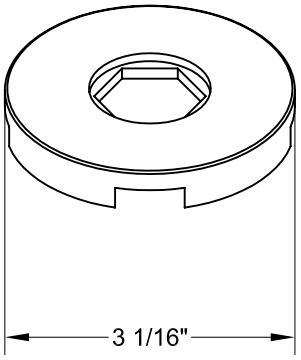

SHIPPING WEIGHT
* 1.25 LBS

FISHER MANUFACTURING COMPANY
TOLL FREE: 800-421-6162 - FAX: 800-832-8238
information@fisher-mfg.com - www.fisher-mfg.com

SPEC. 6130 REV.B