SPEC. PRHS-SPA-8BSEELL

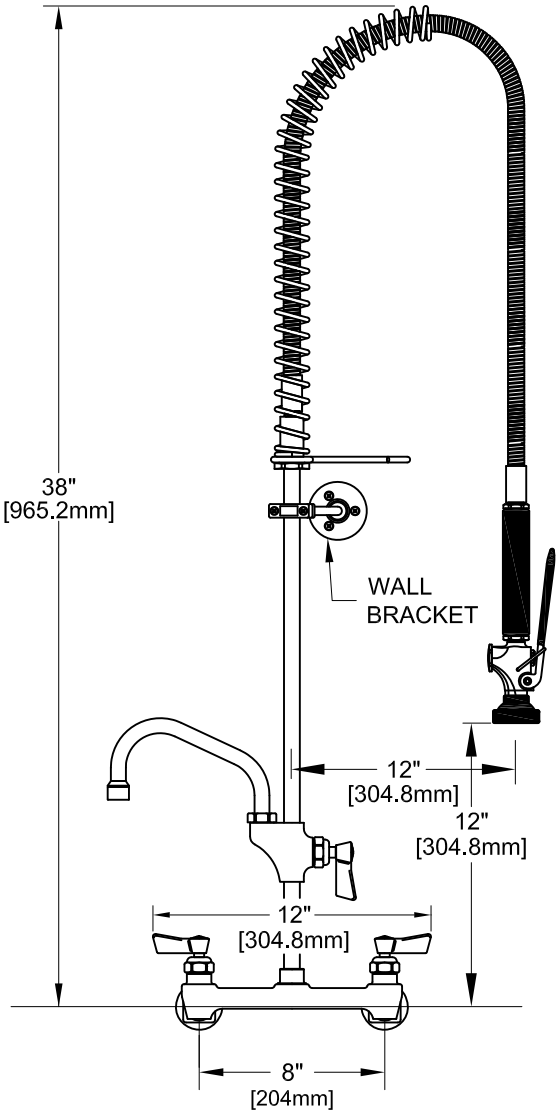

8" C/C BACKSPLASH FAUCET

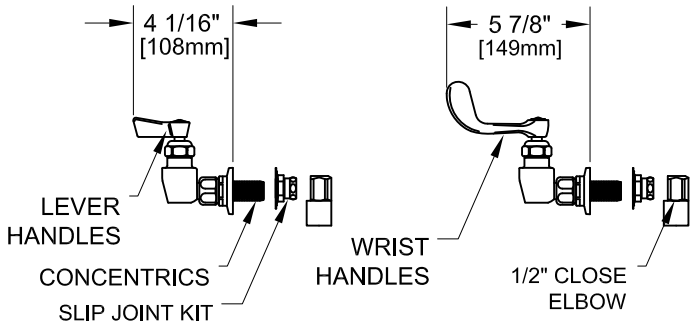

ROUGH-IN:

BACKSPLASH

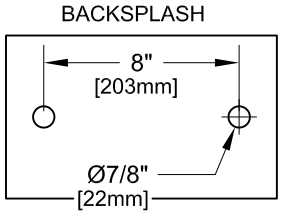

PRODUCT NAME: STAINLESS STEEL
8" BACKSPLASH PRE-RINSE WITH
ADD-ON & ELBOWS

MODEL:

- ☐ 68152 6" SWING SPOUT W/ LEVER HANDLES
- ☐ 68160 8" SWING SPOUT W/ LEVER HANDLES
- ☐ 68179 10" SWING SPOUT W/ LEVER HANDLES
- ☐ 68187 12" SWING SPOUT W/ LEVER HANDLES
- ☐ 68195 14" SWING SPOUT W/ LEVER HANDLES
- ☐ 68209 16" SWING SPOUT W/ LEVER HANDLES
- ☐ 74721 6" SWING SPOUT W/ WRIST HANDLES
- ☐ 74748 8" SWING SPOUT W/ WRIST HANDLES
- ☐ 74756 10" SWING SPOUT W/ WRIST HANDLES
- ☐ 74764 12" SWING SPOUT W/ WRIST HANDLES
- ☐ 74772 14" SWING SPOUT W/ WRIST HANDLES
- ☐ 74780 16" SWING SPOUT W/ WRIST HANDLES

FEATURES:

CONTROL VALVE
* 8" C/C BACKSPLASH MOUNT
* CONCENTRICS
* INTERNAL SPRING LOADED CHECK VALVES
* SWIVELLING SEAT DISKS
* HOT SIDE STEM - RIGHT HAND
* COLD SIDE STEM - LEFT HAND
* STAINLESS STEEL SEATS
* STAINLESS STEEL SEAT SCREWS
* STAINLESS STEEL HANDLE SCREWS
* 1/2" CLOSE ELBOWS

ADD-ON CONTROL VALVE
* STEM - RIGHT HAND SWIVEL
* HOT INDEX BUTTON
* SWIVELLING SEAT DISKS
* STAINLESS STEEL SEATS, SEAT SCREWS AND HANDLE SCREWS.

HOSE
* 36" LENGTH
* STAINLESS STEEL END FITTINGS
* STAINLESS STEEL EXTERNAL JACKET
* 3-PLY FIBER REINFORCED INTERNAL RUBBER HOSE
* REPAIRABLE IN FIELD WITH SIMPLE TOOLS

ULTRA SPRAY VALVE
* LOWEST ENERGY USER - 1.15 GPM @ 60 PSI
* CLEANS FASTER - TEST PROVEN
* ENGINEERED TO LAST - NO 'O' RINGS TO LEAK
* INTERCHANGEABLE - FITS ALL BRANDS

WALL BRACKET
* ADJUSTS FROM 2" TO 12"

SYSTEM LIMITS
* TEMP: 40°F MIN. TO 160°F MAX. STATIC
* PRESSURE 200 PSI MAX. STATIC
* SHIPPING WEIGHT: 15.0 LBS

* NSF 61-9 APPROVED & LISTED
www.truesdail.com

FISHER

FISHER MANUFACTURING COMPANY
TOLL FREE: 800-421-6162 - FAX: 800-832-8238
information@fisher-mfg.com - www.fisher-mfg.com

WARNING:
Proposition 65 requires that we provide you with the following notice: "This product Contains A Chemical Known To The State Of California To Cause Cancer Or Birth Defects Or Other Reproductive Harm."

ANSI/A112.18.1